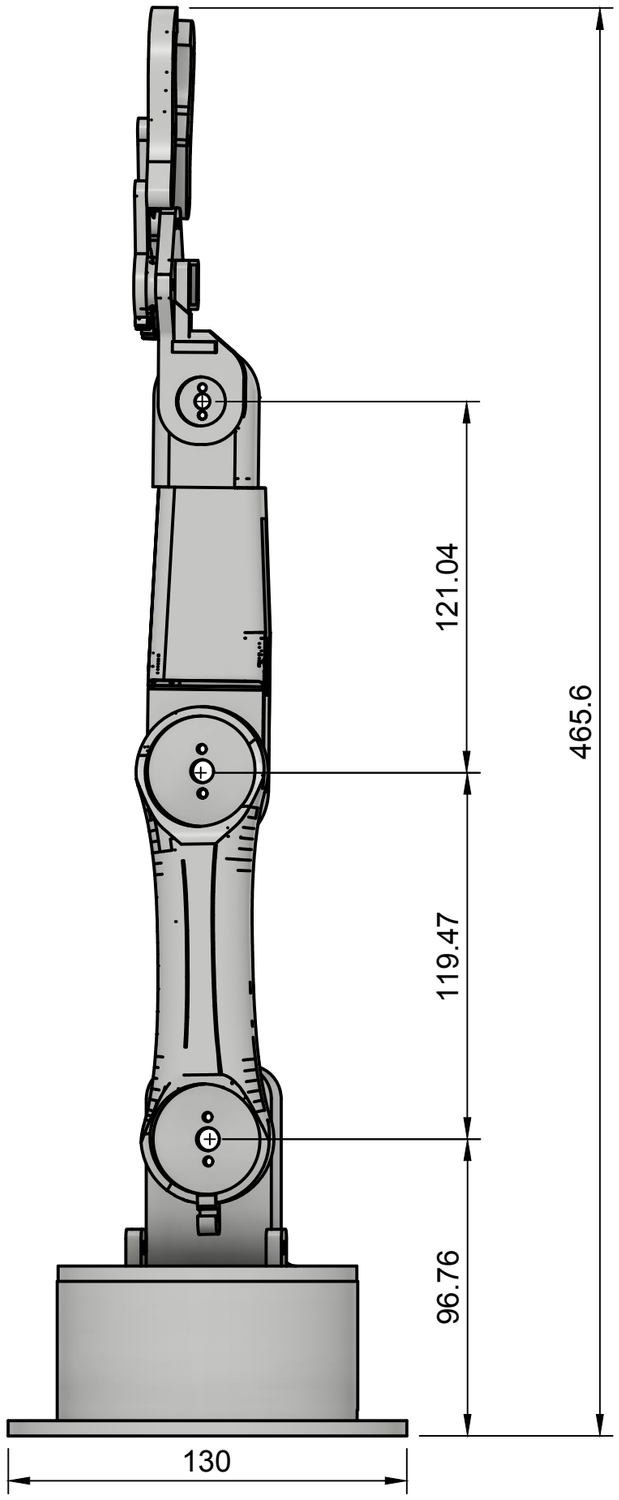

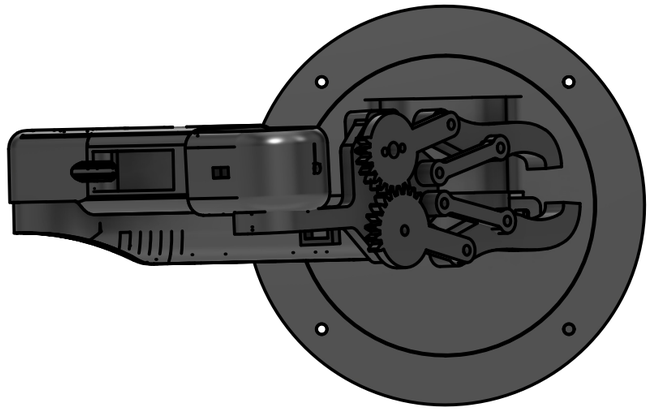

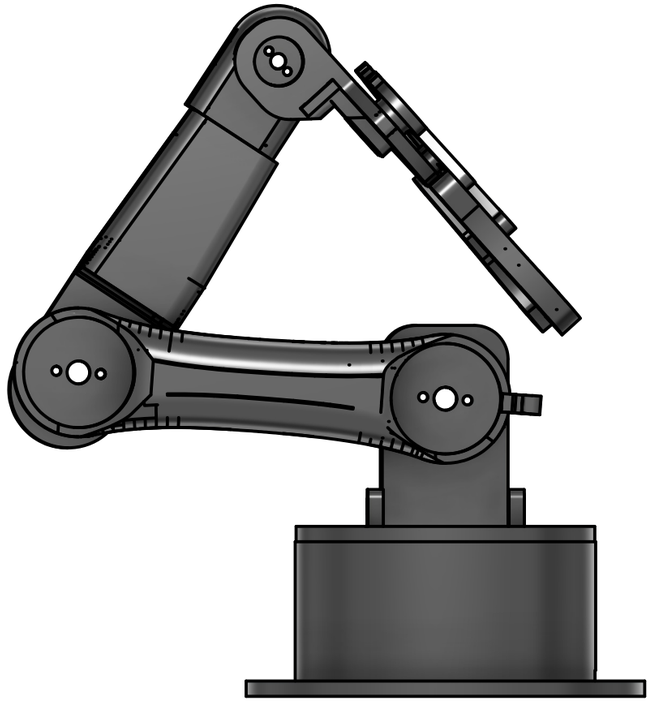

Dept.	Technical reference	Created by Razvan Cioc 27.03.2026	Approved by
		Document type	Document status
		Title Ramy-Robotic Arm	DWG No.
			Rev. / Date of issue / Sheet 1/1